

Aero Still Vintage 150 H

Extract fan for low-noise applications

- Casing material: Plastic
- Backdraft protection: Backdraft damper
- Humidity sensor
- Timer: Turn off timer

	Unit of measurement	Aero Still Vintage 150 H
Minimum supply voltage	V	220
Maximum supply voltage	V	240
Power supply frequency	Hz	50
Maximum airflow	m^3/h	254
Ambient air temperature min	°C	1
Ambient air temperature max	°C	40
Ingress protection rating	-	IP34
Impeller material	-	Plastic

Dimensions

a	b	c	Ø d	e
198	170	119	150	30

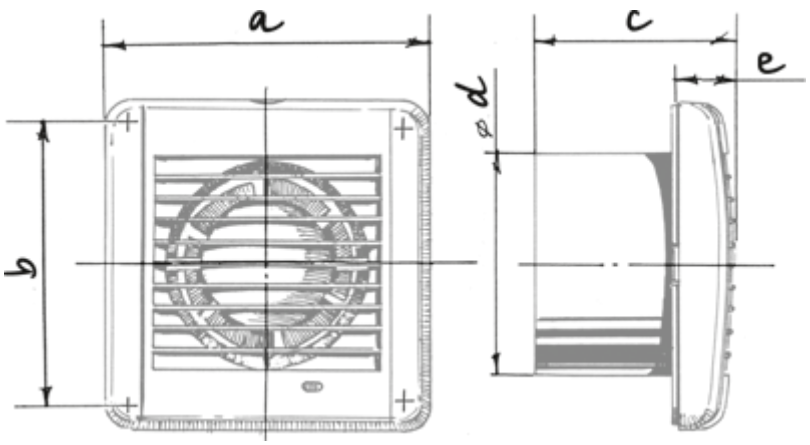
a
b
c
e
d
ø

Ecodesign

Trademark	Blauberg					
Model	Aero Still Vintage 150 H					
Specific energy consumption (SEC) (kWh/(m²/a))	Cold		Average		Warm	
	-54.4	A+	-27.3	B	-11.8	E
Type of ventilation unit	Unidirectional					
Type of drive installed	Multi-speed					
Type of heat recovery system	None					
Maximum flow rate (m³/h)	254					
Electric power input (W)	19					
Reference flow rate (m³/s)	0.049					
Specific power input (SPI) (W/(m³/h))	0.048					
Control typology	Local demand control					
Maximum external leakage rates (%)	2.7					
Declared typology	RVU UVU					
Sound power level (dB(A))	53					
The annual electricity consumption (AEC) (kWh/a)	Cold		Average		Warm	
	39		39		39	
The annual heating saved (AHS) (kWh/a)	Cold		Average		Warm	
	5536		2830		1280	