

Axis-F 500 6E (220V/60Hz)

Axial inline fans

- Impeller type: Axial
- Casing material: Coated steel
- Installation in any position

	Unit of measurement	Axis-F 500 6E (220V/60Hz)
Phases	-	1
Minimum supply voltage	V	220
Maximum supply voltage	V	240
Power supply frequency	Hz	60
Weight	kg	11
Transported air temperature (max)	°C	50
Transported air temperature (min)	°C	-30
Ingress protection rating	-	IP24
Ingress protection rating of the drive	-	IP54
Impeller material	-	Coated steel

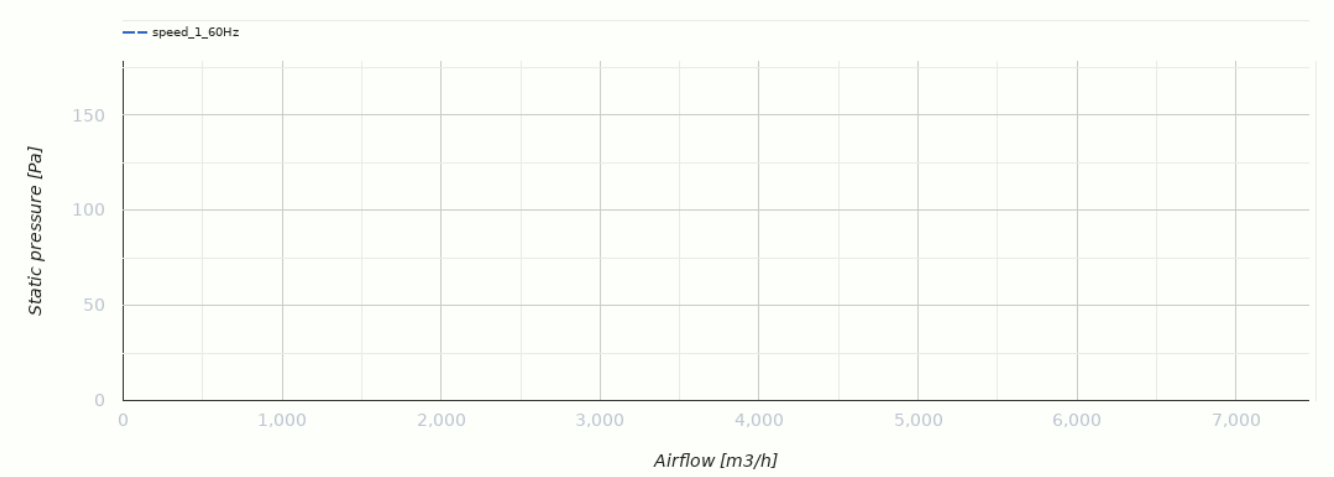

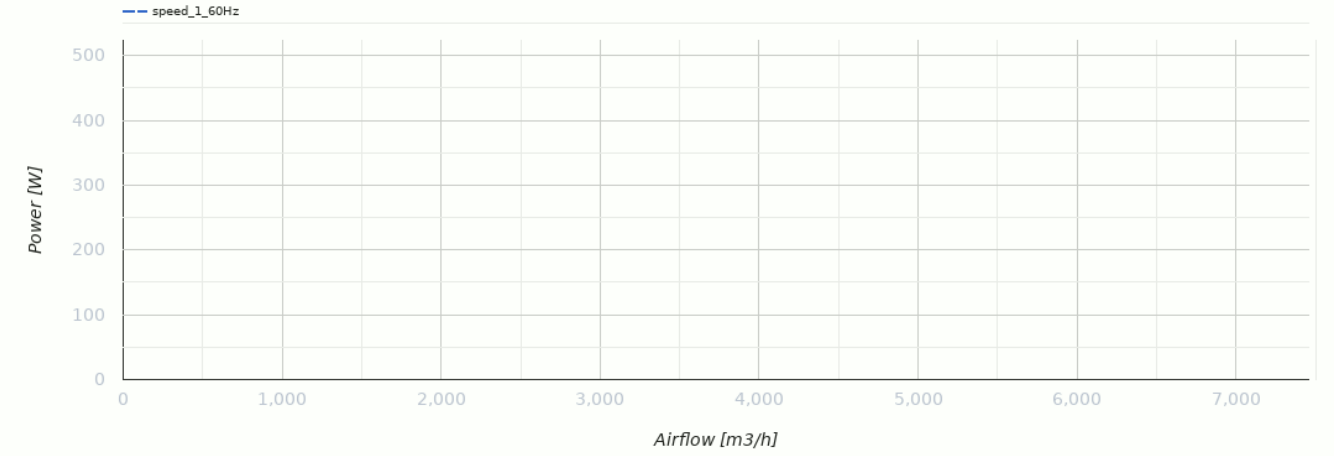

Dimensions

ØD	ØD1	ØD2	Ød	B	L
515	541	570	9,5	600	220

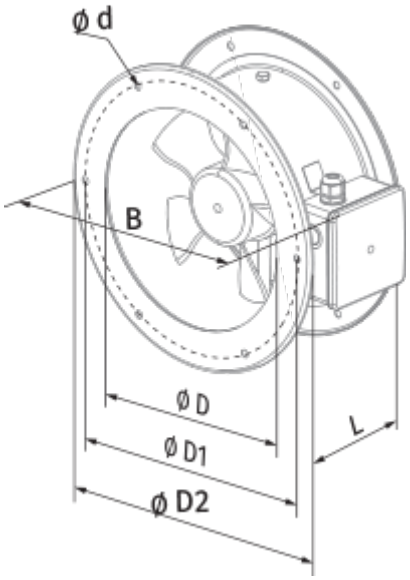
ø d
B
ø D
ø D1
ø D2
L

Ecodesign

Trademark	Blauberg
Model	Axis-F 500 6E (220V/60Hz)
Type of drive installed	External MSD or VSD
Type of heat recovery system	None
Nominal external pressure (Pa)	100
Maximum external leakage rates (%)	2.7
Static efficiency (%)	32.1
Declared typology	NRVU UVU
Effective electric power input (kW)	0.44
Sound power level (dB(A))	89