

Iso Box-F 200 G4/H13 V2

Centrifugal inline fans with forward curved blades in sound-insulated casings with filters

• Sound-insulated casing
• Impeller type: Centrifugal impeller with backward curved blades
• Casing material: Coated steel
• Installation in any position

	Unit of measurement	Iso Box-F 200 G4/H13 V2	
Speed	-	1	2
Phases	-	1	
Minimum supply voltage	V	230	
Maximum supply voltage	V	230	
Power supply frequency	Hz	50	
Maximum airflow	m³/h	350	525
Weight	kg	19.1	
Transported air temperature (max)	°C	40	
Transported air temperature (min)	°C	-25	
Ingress protection rating	-	IPX4	
Ingress protection rating of the drive	-	IP44	
Impeller material	-	Plastic	

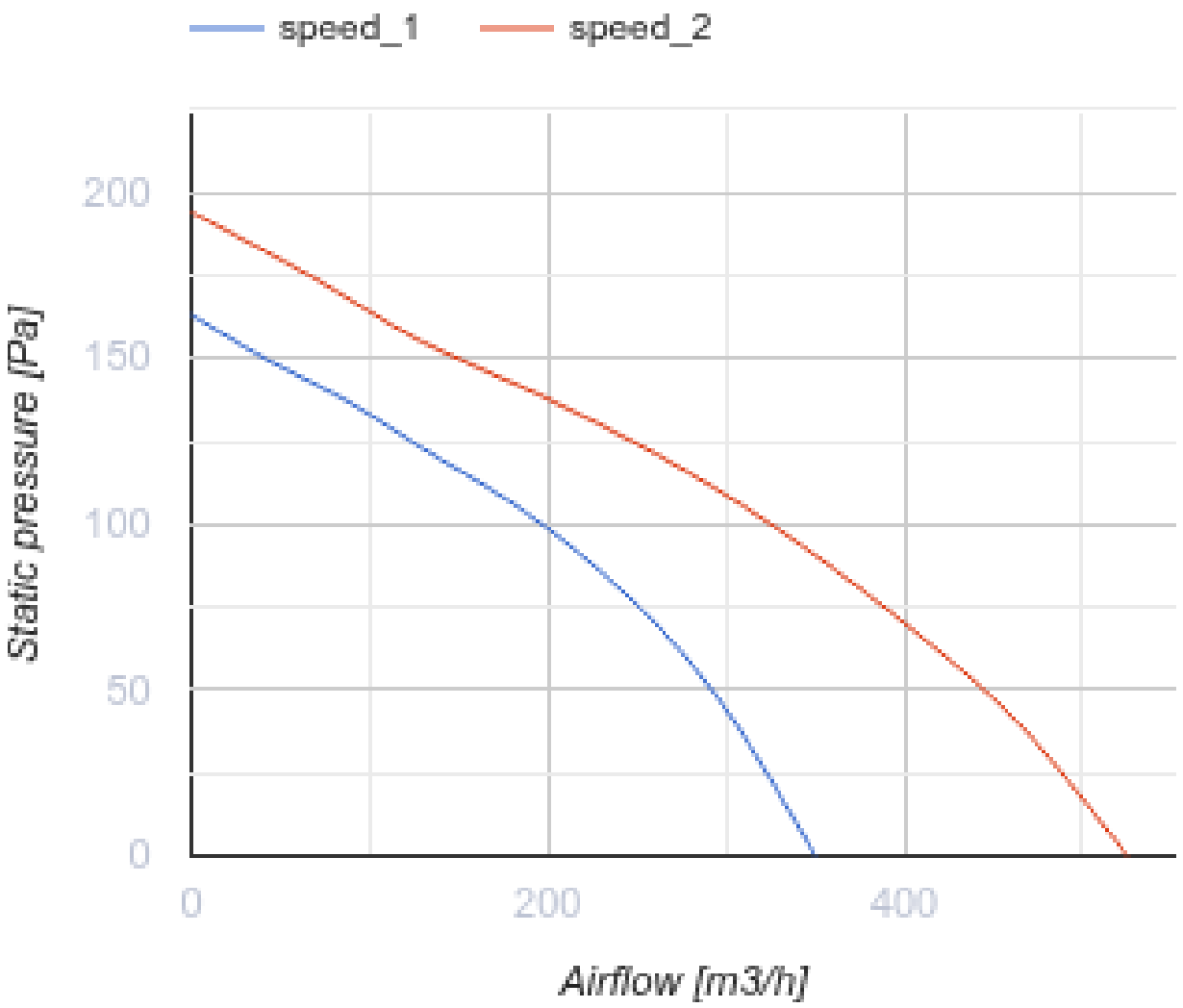

Dimensions

ØD	L	H	B	L1	B1	L2	B2
200	735	300	605	835	698	680	648

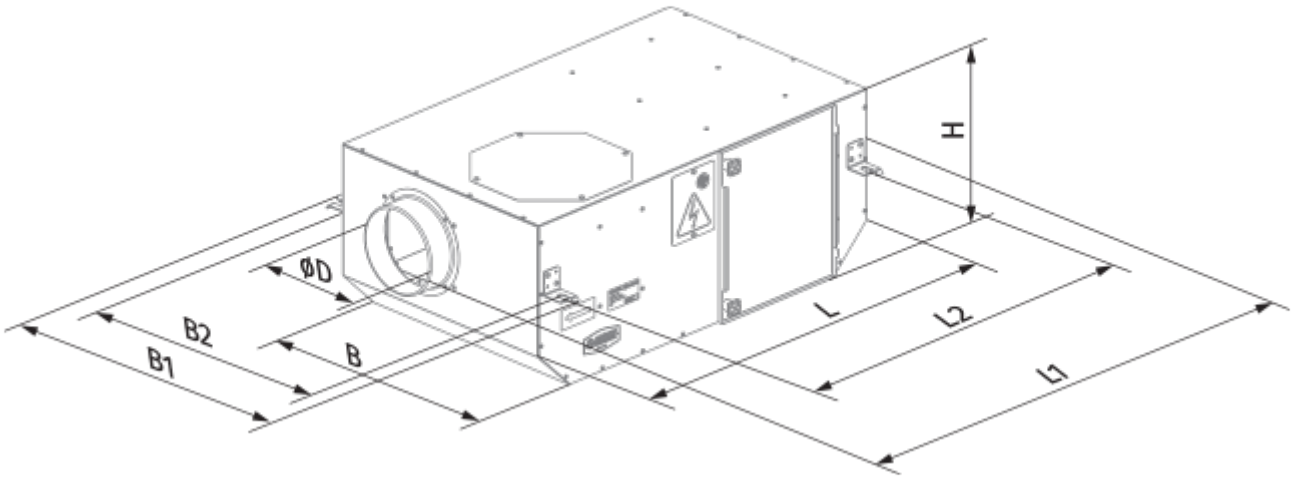
H
ØD
B2
B1
B
L
L2
L1

Ecodesign

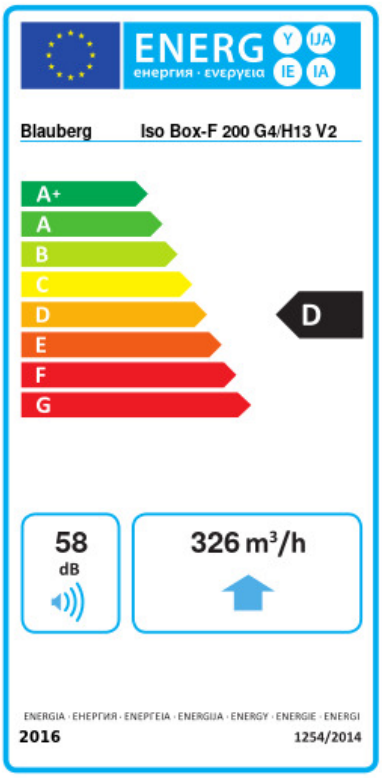

Trademark	Blauberg					
Model	Iso Box-F 200 G4/H13 V2					
Specific energy consumption (SEC) (kWh/(m²/a))	Cold		Average		Warm	
	-48.9	A+	-21.9	D	-6.4	F
Type of ventilation unit	Unidirectional					
Type of drive installed	2-speed					
Type of heat recovery system	None					
Maximum flow rate (m³/h)	326					
Electric power input (W)	112					
Reference flow rate (m³/s)	0.063					
Reference pressure difference (Pa)	50					
Specific power input (SPI) (W/(m³/h))	0.344					
Control typology	Local demand control					
Maximum external leakage rates (%)	2.7					
Declared typology	RVU UVU					
Sound power level (dB(A))	58					
The annual electricity consumption (AEC) (kWh/a)	Cold		Average		Warm	
	257		257		257	
The annual heating saved (AHS) (kWh/a)	Cold		Average		Warm	
	5536		2830		1280	