

S22 Wi-Fi

Control panels

• Casing material: Plastic

	Unit of measurement	S22 Wi-Fi
Minimum supply voltage	V	110
Maximum supply voltage	V	230
Power supply frequency	Hz	50/60
Weight	kg	0.19
Ambient air temperature max	°C	45
Ambient air temperature min	°C	10
Ingress protection rating	-	IP40

Dimensions

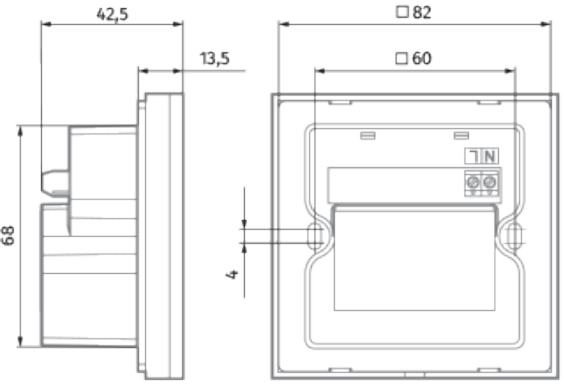

S22 / S22 Wi-Fi control panel

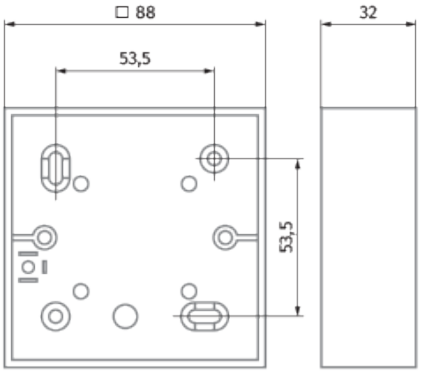

Surface mounting box

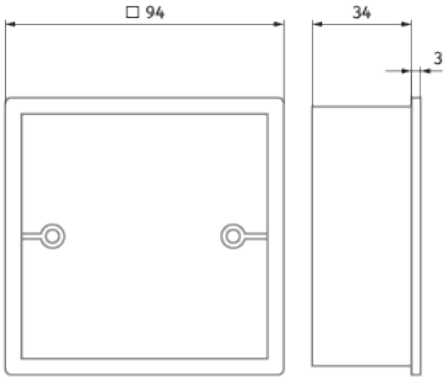

Flush mounting box