

Sileo 125 Cosmos Black

High-performance low noise extract fans

- Casing material: Plastic
- Backdraft protection: Backdraft damper

	Unit of measurement	Sileo 125 Cosmos Black
Phases	-	1
Maximum supply voltage	V	240
Minimum supply voltage	V	220
Power supply frequency	Hz	50
Maximum airflow	m³/h	185
Weight	kg	0.78
Ambient air temperature min	°C	1
Ambient air temperature max	°C	40
Ingress protection rating	-	IP45
Impeller material	-	Plastic

Dimensions

a	b	c	Ø d	e
158	182	91	124	27

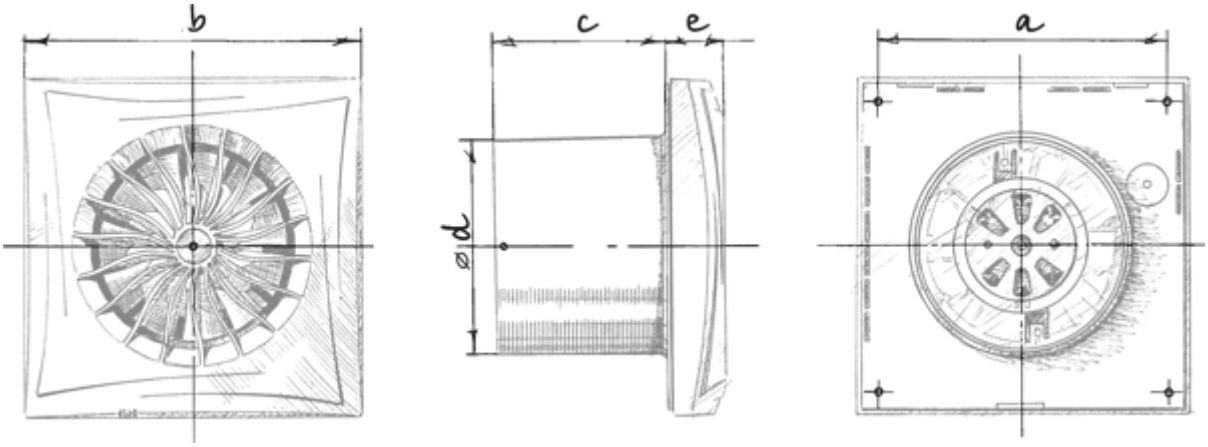
b
c
e
a
ød

Ecodesign

Trademark	Blauberg					
Model	Sileo 125 Cosmos Black					
Specific energy consumption (SEC) (kWh/(m²/a))	Cold		Average		Warm	
	-30.7	B	-14.3	E	-4.9	F
Type of ventilation unit	Unidirectional					
Type of drive installed	Single speed					
Type of heat recovery system	None					
Maximum flow rate (m³/h)	185					
Electric power input (W)	17					
Reference flow rate (m³/s)	0.036					
Specific power input (SPI) (W/(m³/h))	0.092					
Control typology	Manual control					
Maximum external leakage rates (%)	2.7					
Sound power level (dB(A))	52					
Declared typology	RVU UVU					
The annual electricity consumption (AEC) (kWh/a)	Cold		Average		Warm	
	115		115		115	
The annual heating saved (AHS) (kWh/a)	Cold		Average		Warm	
	3355		1715		776	