

Tubo 125 T

Inline axial fan for supply and exhaust ventilation

- Casing material: Plastic
- Timer: Turn off timer

	Unit of measurement	Tubo 125 T
Phases	-	1
Maximum supply voltage	V	240
Minimum supply voltage	V	220
Power supply frequency	Hz	50/60
Maximum airflow	m³/h	195
Weight	kg	0.43
Ambient air temperature min	°C	1
Ambient air temperature max	°C	40
Ingress protection rating	-	IPX4
Impeller material	-	Plastic

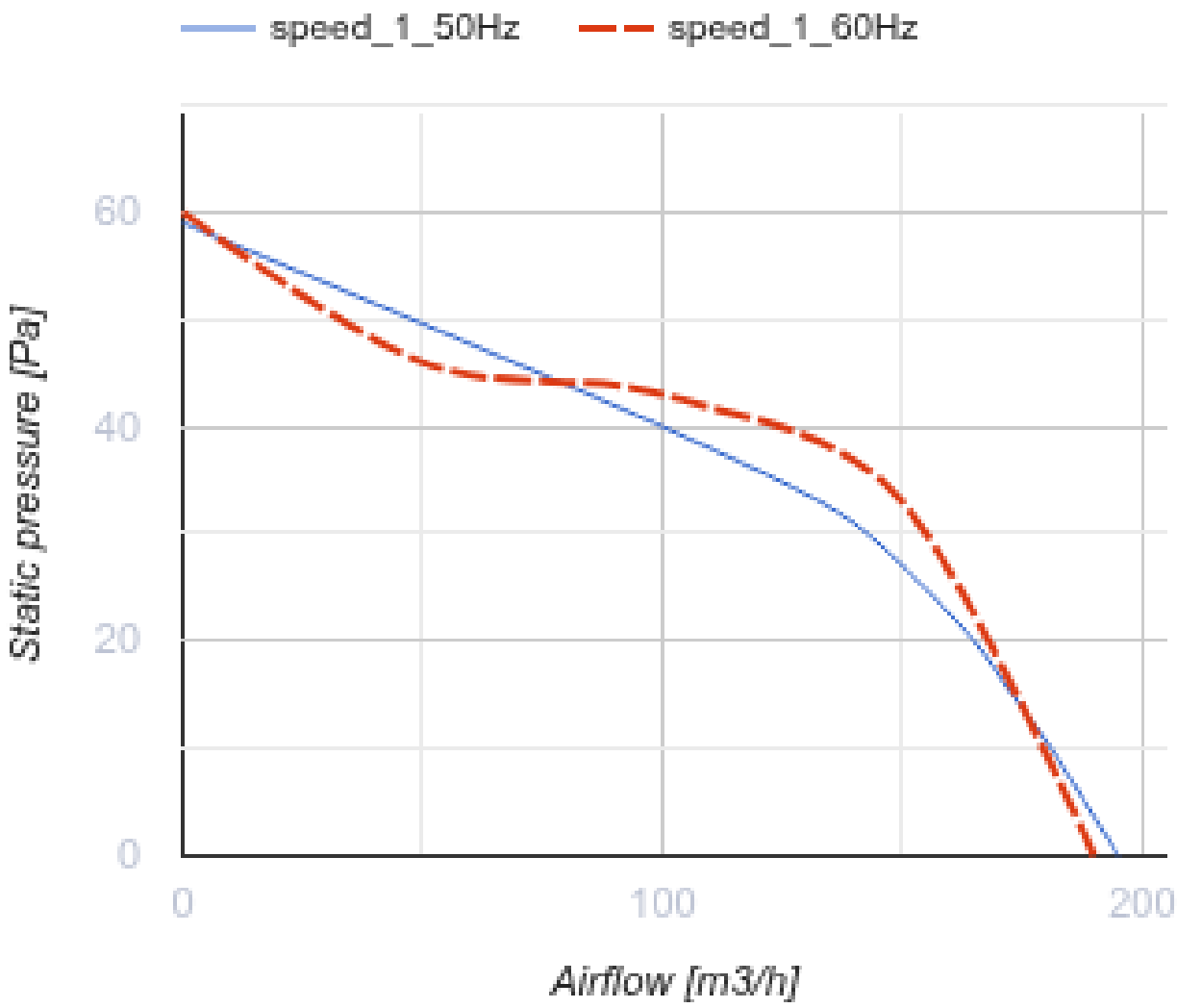

Dimensions

c	Ø d
90	125

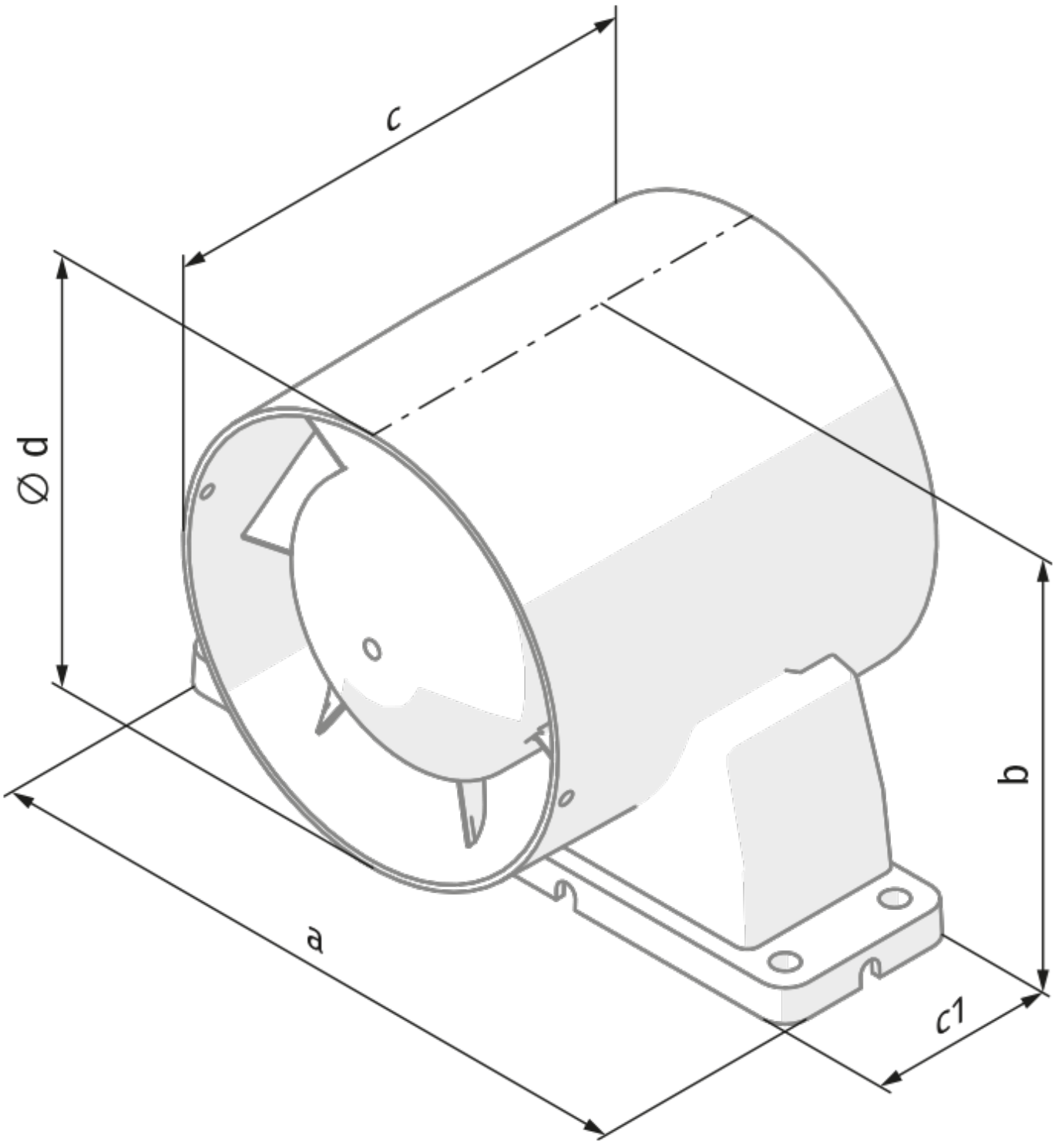
c
Ø d
b
a
c1

Ecodesign

Trademark	Blauberg					
Model	Tubo 125 T					
Specific energy consumption (SEC) (kWh/(m²/a))	Cold		Average		Warm	
	-35	A	-17.1	E	-6.8	F
Type of ventilation unit	Unidirectional					
Type of drive installed	Multi-speed					
Type of heat recovery system	None					
Maximum flow rate (m³/h)	245					
Electric power input (W)	22					
Reference flow rate (m³/s)	0.048					
Specific power input (SPI) (W/(m³/h))	0.058					
Control typology	Clock control					
Maximum external leakage rates (%)	2.7					
Declared typology	RVU UVU					
Sound power level (dB(A))	59					
The annual electricity consumption (AEC) (kWh/a)	Cold		Average		Warm	
	67		67		67	
The annual heating saved (AHS) (kWh/a)	Cold		Average		Warm	
	3667		1874		848	