

Vento Eco Comfort L1

Heat recovery single-room units. Maximum air flow up to 50 m³/h

- Air flow in heat recovery mode: 25
- Sound pressure level LpA at 1 m: 35
- Heat exchanger type: Regenerative
- Heat exchanger material: Ceramic
- Casing material: Plastic

	Unit of measurement	Vento Eco Comfort L1		
Maximum supply voltage	V	240		
Minimum supply voltage	V	100		
Power supply frequency	Hz	50/60		
Air flow in ventilation mode	m³/h	15	35	50
Air flow in heat recovery mode	m³/h	8	15	25
Sound pressure level LpA at 1 m	dB(A)	10	27	35
Heat recovery efficiency, max	%	95		
Heat exchanger type	-	Regenerative		
Heat exchanger material	-	Ceramic		
Transported air temperature (max)	°C	40		
Transported air temperature (min)	°C	-20		
Ingress protection rating	-	IP24		
Minimum wall thickness	mm	330		
Maximum wall thickness	mm	990		

Dimensions

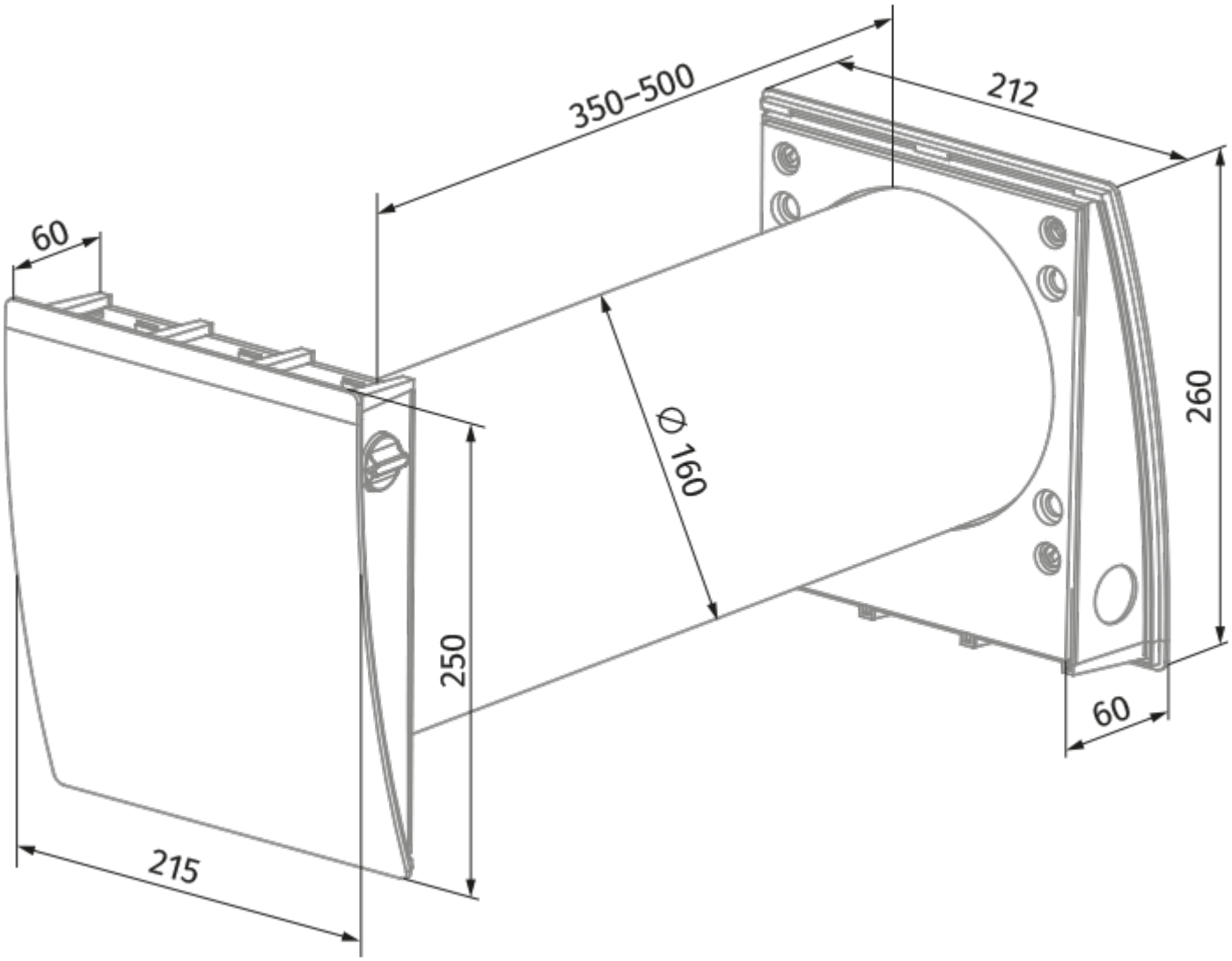

Accessories

Other accessories

Name	Photo	Description
R 160-500		Air duct 160 mm and polystyrene foam plug
R 160-700	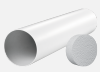	Air duct 160 mm and polystyrene foam plug
FPC 150x50 G4		Filter
FPC 150x50 F7		Filter

FP2 Vento G3		G3 filter kit (2 pcs.)
FP2 Vento G4		Coarse filter G4 Contents: • plastic filter holder (1 pc.) • G4 filter (1 pc.)
FP2 Vento F7		Fine filter F7 Includes: • plastic filter holder (1 pc.) • F7 fine filter (1 pc.). Filtration rate PM2.5 > 70 %

Hoods

Name	Photo	Description
AH-10 beige 160		Plastic hoods decoration of supply and exhaust vents of public, residential and industrial ventilation systems
AH-10 black 160		Plastic hoods decoration of supply and exhaust vents of public, residential and industrial ventilation systems
AH-10 brown 160		Plastic hoods decoration of supply and exhaust vents of public, residential and industrial ventilation systems
AH-10 chrome 160		Plastic hoods decoration of supply and exhaust vents of public, residential and industrial ventilation systems
AH-10 grey 160		Plastic hoods decoration of supply and exhaust vents of public, residential and industrial ventilation systems
AH-10 terracotta 160		Plastic hoods decoration of supply and exhaust vents of public, residential and industrial ventilation systems
AH-10 white 160		Plastic hoods decoration of supply and exhaust vents of public, residential and industrial ventilation systems
AH-8 white 160		Outer ventilation hood with frost protection for a cold climate
AH-8 chrome 160		Outer ventilation hood with frost protection for a cold climate

Plastic

Name	Photo	Description

KIT BlauPlast white 160		Kit for angular mounting (for walls with standard thickness)
KIT BlauPlast chrome 160		Kit for angular mounting (for walls with standard thickness)